REEFE PUMPS AUSTRALIA BETTER | FASTER | EASIER



REEFE DIAPHRAGM LINEAR AIR PUMP INSTRUCTION MANUAL
MODELS: RLB90C – RB90 – RB100 – RB120 – RB200

Thank you for purchasing a REEFE Linear Air Pump. These pumps feature double air chambers to produce a high volume of air and strong air pressure. High performance and low noise; weatherproof design, suitable for indoor and outdoor use; fast heat dissipation, non-oil lubricated design to provide uncontaminated air delivery. REEFE Diaphragm Air Pumps are especially developed for a high air output, even in deep water. The pump is also suitable for aerating breeding systems, waste water treatment systems with multiple air outlets. For optimum performance and safety, please read this instruction manual carefully and keep it handy for future reference.

PRODUCT FEATURES

1. Artificial rubber diaphragms to ensure a steady air output and pressure.
2. Advanced air-delivery system and muffler for low noise.
3. Special cut-off switch if the Diaphragm splits, to avoid pump damage.
4. Compact design with long service life and low energy consumption.
5. Aluminium alloy case provides quick heat-dissipation and reduces overall weight.

INSTALLATION

1. Installation and electrical wiring must adhere to state and local codes and must be completed before using the pump. These pumps come with an earthed power plug and all electrical installations must be earthed. Any Electrical work must be performed by a licenced Electrician.
2. IMPORTANT; The Pump must be connected to a suitable electrical circuit, protected by a RCD (safety switch), all warranty is void if there is no RCD protection. Do not use an extension lead, the pump must be connected directly to a power outlet. All warranty is void if this instruction is not followed. Note: Use of extension leads may cause low voltage supply to the motor, causing blown fuses, tripping of motor overload, or burnt out motor, which will not be covered by the Warranty. If the pump is hard-wired to the electrical circuit, we are not responsible for the costs involved if the product needs to be replaced, as we have no control over the installation method. We do not recommend hard-wiring this product.
3. IMPORTANT: use a DRIP LOOP in the power cable so as any water or condensation that forms on the cable will drip off the cable and not enter the power outlet.
4. Surge Protection - We recommend that a surge protector is used to protect the electronics of this pump, as damage due to power surges is not covered by the Warranty.
5. IMPORTANT: ALWAYS disconnect from the power supply before touching the pump.
6. MOUNTING: This product must be installed on a flat, horizontal surface, protected from the weather. Mount the product on a stable, rigid surface. If necessary, additional rubber mounts will reduce noise and vibration.
7. PLUMBING: Remove the plug from the discharge port. Connect with pipe and fittings that are the same size or larger than the pump discharge port, suitable to your installation; ensure all pipes are secured well to prevent leakage. Using larger bore pipe and avoiding sharp bends will improve performance.
8. AIRSTONES / DIFFUSERS: Use new and sufficiently large air stones or diffusers with suitable discharge capacity. Place them no deeper than 3m in the water body. Bends in the air pipe, air stones that are placed too deep, air stones that are too small, old or dirty air stones, will drastically reduce performance. When the pump is on, never fully close off the pump outlet. Ensure that the pump can discharge sufficient air at all times, otherwise overheating will lead to damage.
9. ACCESSORIES: Use only recommended air fittings and pipework or tubing that is designed for pressure not less than 0.7bar (10psi).
10. BACKFLOW: To prevent any water flowing back into the pump when turned off, it is critical to install the pump above water level. If a non-return valve is used on the outlet pipe, the pump may be installed lower than the waterline, at the installers risk, we do not recommend this type of installation. These Air Pumps must NEVER BE SUBMERGED IN WATER.
11. Install relief valve and gauge at the discharge, to allow you to monitor performance
12. To guarantee longest possible service life, install the pump in a well-ventilated, dry, moisture and dust-free place. Dirt, dust, Chlorine fumes, other gases and moisture will shorten the service life of this pump and/or can be hazardous. NEVER use the pump if it is not in a place with clean fresh air. Please note that in an ambient temperature above +40°C, the diaphragm will prematurely age and will be more likely to crack.

DIAPHRAGM BREAKAGE SWITCH

The Diaphragm Breakage Switch system stops the pump when the diaphragm is split or punctured. This causes an unusual longer stroke of the magnet, which then actuates the microswitch on top of the motor cover (inside the pump, part number 6 & 8 in the below diagram) and automatically shuts down the power. See DIAPHRAGM REPLACEMENT instructions below .

FILTER SPONGE CLEANING INSTRUCTIONS

Any dust or foreign matter lodged in the pump inlet will cause abnormal noises and/or result in failure of the pump. The filter sponge must be inspected after the first 500 hours of operation, and cleaned or replaced at least every three months.

1. Unplug the pump first before cleaning & replacement work. Remove the air inlet cover from the top of the housing.
2. Remove the filter sponge from the air inlet. At the same time, remove any dust or foreign matter from the air inlet, the air inlet cover and the filter sponge mounting surface. If the sponge is soiled, a piece of new sponge is needed or you can use a neutral detergent to wash the old sponge. Remember to rinse it thoroughly with water and dry it out in the sun before reinstalling. Detergent is detrimental to fish and other aquatic life.

EXPLODED VIEW – RLB90C

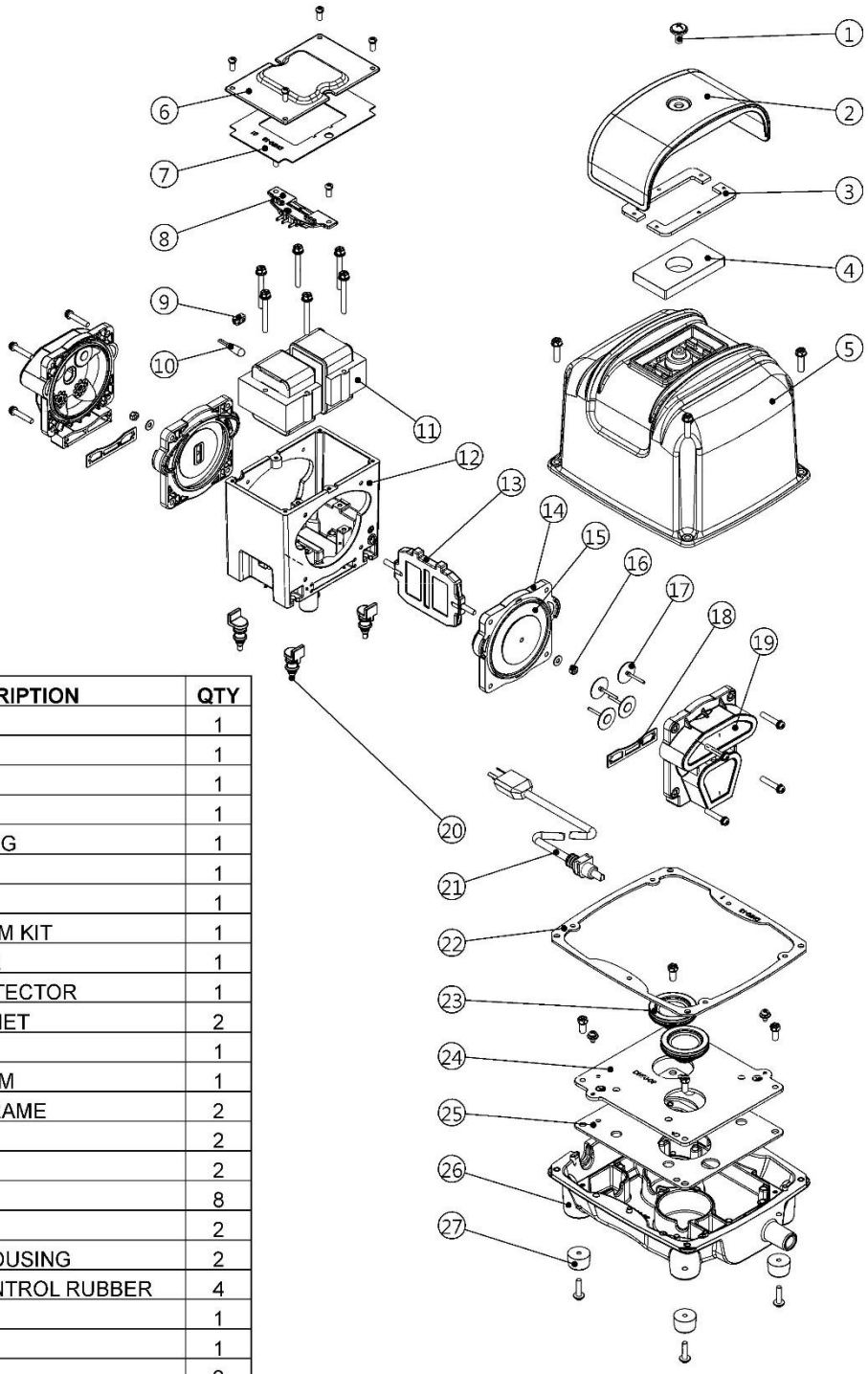

NO.	DESCRIPTION	QTY
1	TOP SCREW	1
2	FILTER COVER	1
3	FOAM SEAL	1
4	FILTER	1
5	UPPER HOUSING	1
6	COIL COVER	1
7	GASKET - 1	1
8	SAFETY SYSTEM KIT	1
9	WIRE STOPPER	1
10	THERMAL PROTECTOR	1
11	ELECTROMAGNET	2
12	COIL FRAME	1
13	ACTIVATING ARM	1
14	DIAPHRAGM FRAME	2
15	DIAPHRAGM	2
16	U – NUT	2
17	CHECK VALVE	8
18	GASKET - 2	2
19	DIAPHRAGM HOUSING	2
20	VIBRATION CONTROL RUBBER	4
21	POWER CORD	1
22	GASKET - 3	1
23	TUBE	2
24	STEEL PLATE	1
25	GASKET - 4	1
26	LOWER HOUSING	1
27	RUBBER FEET	4

EXPLODED VIEW – RB90 & RB100

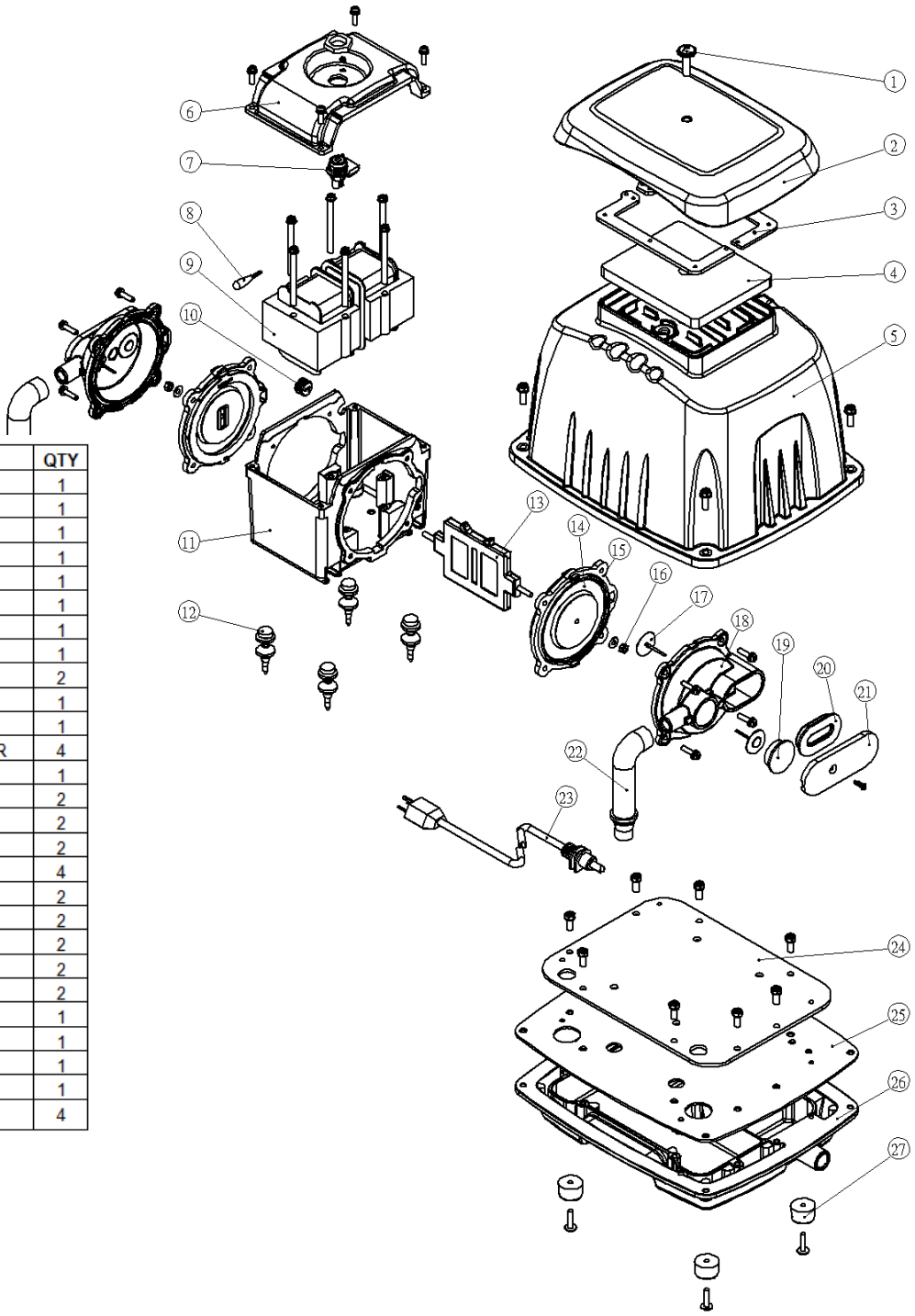

NO.	DESCRIPTION	QTY
1	TOP SCREW	1
2	FILTER COVER	1
3	FOAM SEAL	1
4	FILTER	1
5	UPPER HOUSING	1
6	COIL COVER	1
7	SAFETY SYSTEM KIT	1
8	THERMAL PROTECTOR	1
9	ELECTROMAGNET	2
10	WIRE STOPPER	1
11	COIL FRAME	1
12	VIBRATION CONTROL RUBBER	4
13	ACTIVATING ARM	1
14	DIAPHRAGM	2
15	DIAPHRAGM FRAME	2
16	U-NUT	2
17	CHECK VALVE	4
18	DIAPHRAGM HOUSING	2
19	CHAMBER SEAL (ROUND)	2
20	CHAMBER SEAL (OVAL)	2
21	SIDE COVER (STEEL)	2
22	L – TUBE	2
23	POWER CORD	1
24	STEEL PLATE	1
25	GASKET	1
26	LOWER HOUSING	1
27	RUBBER FEET	4

EXPLODED VIEW – RB120

NO.	DESCRIPTION	QTY
1	TOP SCREW	1
2	FILTER COVER	1
3	FOAM SEAL	1
4	FILTER	1
5	UPPER HOUSING	1
6	SAFETY SYSTEM NUT	1
7	COIL COVER	1
8	SAFETY SYSTEM KIT	1
9	ELECTROMAGNET	2
10	WIRE STOPPER	1
11	COIL FRAME	1
12	ACTIVATING ARM	1
13	DIAPHRAGM FRAME	2
14	DIAPHRAGM	2
15	U – NUT	2
16	DIAPHRAGM HOUSING	2
17	CHECK VALVE	8
18	GASKET – 1	2
19	DIAPHRAGM HOUSING COVER	2
20	THERMAL PROTECTOR	1
21	L – TUBE	2
22	VIBRATION CONTROL RUBBER	4
23	POWER CORD	1
24	STEEL PLATE	1
25	GASKET – 2	1
26	LOWER HOUSING	1
27	RUBBER FEET	4

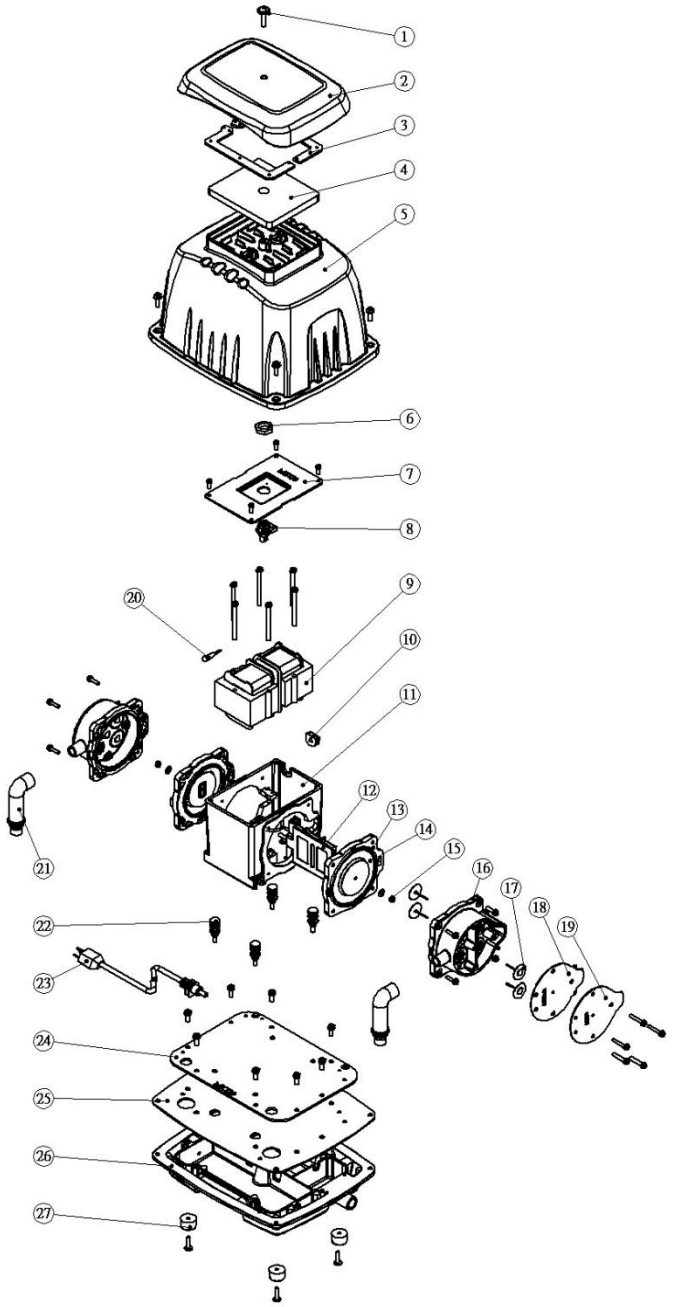

EXPLODED VIEW – RB200

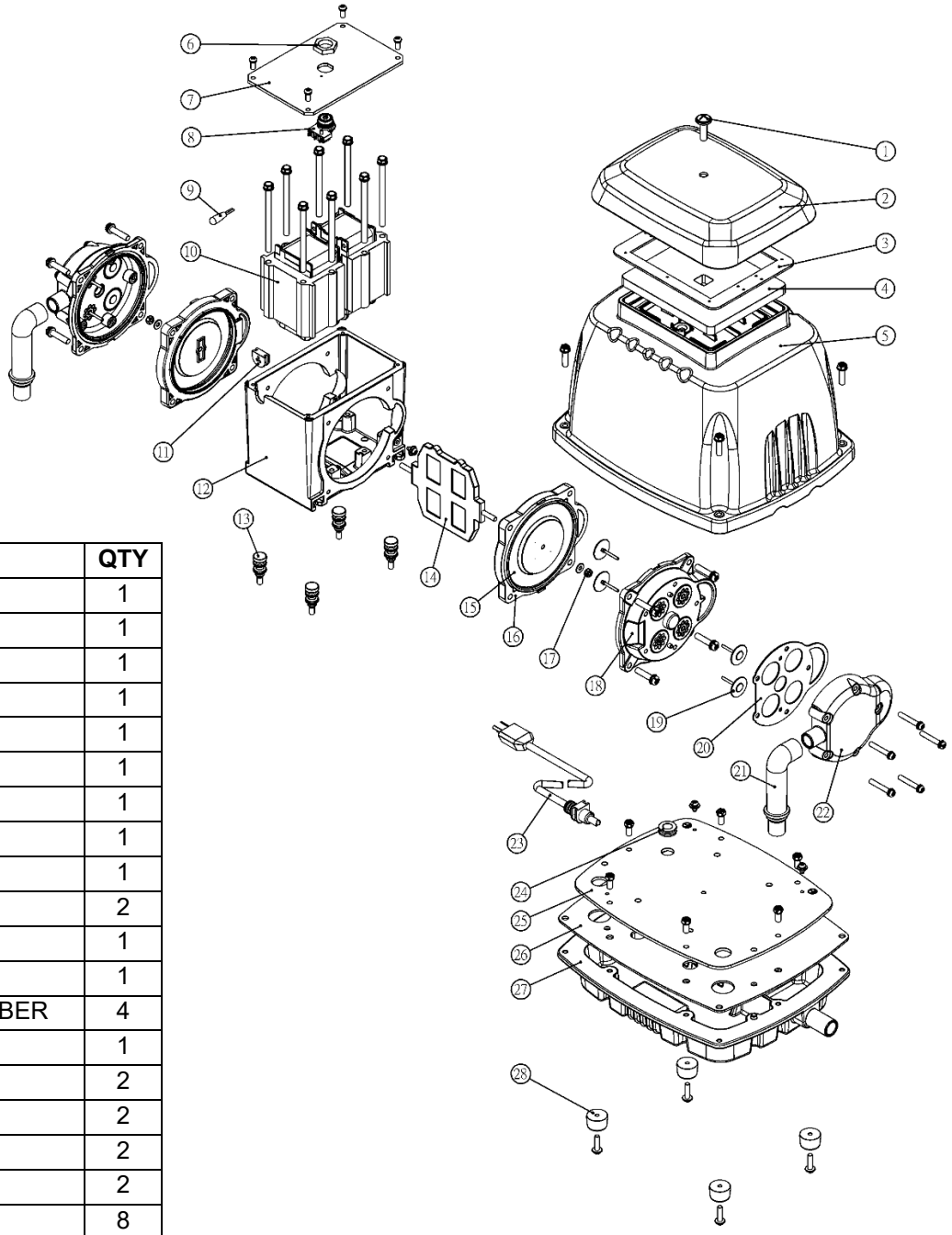

NO.	DESCRIPTION	QTY
1	TOP SCREW	1
2	FILTER COVER	1
3	FOAM SEAL	1
4	FILTER	1
5	UPPER HOUSING	1
6	SAFETY SYSTEM NUT	1
7	COIL COVER	1
8	SAFETY SYSTEM KIT	1
9	THERMAL PROTECTOR	1
10	ELECTROMAGNET	2
11	WIRE STOPPER	1
12	COIL FRAME	1
13	VIBRATION CONTROL RUBBER	4
14	ACTIVATING ARM	1
15	DIAPHRAGM	2
16	DIAPHRAGM FRAME	2
17	U – NUT	2
18	DIAPHRAGM HOUSING	2
19	CHECK VALVE	8
20	GASKET - 1	2
21	L – TUBE	2
22	DIAPHRAGM HOUSING COVER	2
23	POWER CORD	1
24	CORD PROTECTOR	1
25	STEEL PLATE	1
26	GASKET - 2	1
27	LOWER HOUSING	1
28	RUBBER FEET	4

DIAPHRAGM REPLACEMENT

1. Unplug the pump and/or disconnect from the power supply before cleaning & servicing.
2. The diaphragm should be inspected every 3 months by a qualified technician.
3. It must be replaced by a qualified technician every 6 to 12 months or as soon as it is worn or cracked, to avoid damage to the pump. This damage is not covered by warranty.
4. Loosen the four screws around the aluminium upper housing and take the housing off.
5. Loosen the four screws around the coil cover and take the cover off.
6. Loosen the four screws and disassemble the diaphragm housing.
7. Loosen the u-nut in the centre of diaphragm.
8. Take the diaphragm off the mount.
9. Replace with a new diaphragm by mounting the rubber studs into their position.
10. Press the rim of the diaphragm into the ring.
11. Secure the magnet with a new u-nut and screw and put the diaphragm housing back with the four screws on.
12. Put the coil cover back with the four screws on.
13. Put on the aluminium upper housing and secure the four screws firmly.

SAFETY PRECAUTIONS

1. WARNING: this pump contains rare earth magnets on the activating arm, be very careful when disassembling these parts — Do NOT allow the magnets to come into contact with any electronic devices, including watches, cell phones, tablets, computers or any device containing electronic instruments or parts etc. DAMAGE TO ELECTRONIC DEVICES CAN RESULT FROM CLOSE CONTACT WITH THESE MAGNETS.
2. Ensure that power voltage and frequency supply conforms to the power requirements specified on the product nameplate, before use. It should be 230 to 240VAC, 50Hz.
3. This pump must be earthed, do not tamper with the earthing connections.
4. If the pump falls into the water, don't try to remove it when power is on! First unplug it or turn off the main switch, and then retrieve it. The pump will need to be disposed of if this occurs.
5. If the supply cord is damaged, it must be replaced by a qualified Electrician or a certified technician. Never carry the air pump by the power supply cord. Disconnect the power supply to the pump when not in use, and before maintenance and repairs.
6. Periodical maintenance of the appliance is necessary to maintain peak performance and safe functioning. The filter must be inspected and cleaned, if necessary, after the first 500 hours of operation, and then a suitable schedule of checking be decided upon, to ensure the filter is cleaned at a suitable time, regularly. The diaphragms must be checked for wear & tear at least every 3 months, and replaced as soon as wear or tear occurs, or by 6 to 12 months.
7. During operation, if the pumps stops inexplicably or if and when anything abnormal occurs, immediately unplug the power cable from the outlet and contact your dealer or an Authorized Service Centre or qualified technician.
8. This pump is an Oil-less type requiring NO lubrication.
9. Consult your approved dealer before using at high altitudes.
10. NEVER have only ONE pump if your application is critical and relies upon the pump, you must have a backup pump at all times, this is a condition of warranty.

TECHNICAL DATA

Model	RLB90C	RB90	RB100	RB120	RB200
Power	56W	70W	87W	110W	186W
Voltage	240	240	240	240	240
Frequency	50Hz	50Hz	50Hz	50Hz	50Hz
Standard Pressure	0.015MPa	0.015MPa	0.018MPa	0.02MPa	0.02MPa
Max Pressure	>0.035MPa	>0.040MPa	>0.045MPa	>0.052MPa	>0.047MPa
Rated Output (at X.XXX MPa)	90L/min (at 0.015MPa)	90L/min (at 0.015MPa)	100L/min (at 0.018MPa)	120L/min (at 0.02MPa)	200L/min (at 0.02MPa)
Approx. Noise Level	42dB	46dB	48dB	46dB	47dB
Thermal Overload	120°C	120°C	120°C	120°C	120°C
Min/Max Ambient Temp.	-10/40°C	-10/40°C	-10/40°C	-10/40°C	-10/40°C
Weight	6.3kg	8.8kg	8.8kg	9.2kg	11.9kg
Size	201L x 176W x 208H mm	262L x 216W x 229H mm	262L x 216W x 229H mm	262L x 216W x 229H mm	272L x 226W x 247H mm

PERFORMANCE CURVE

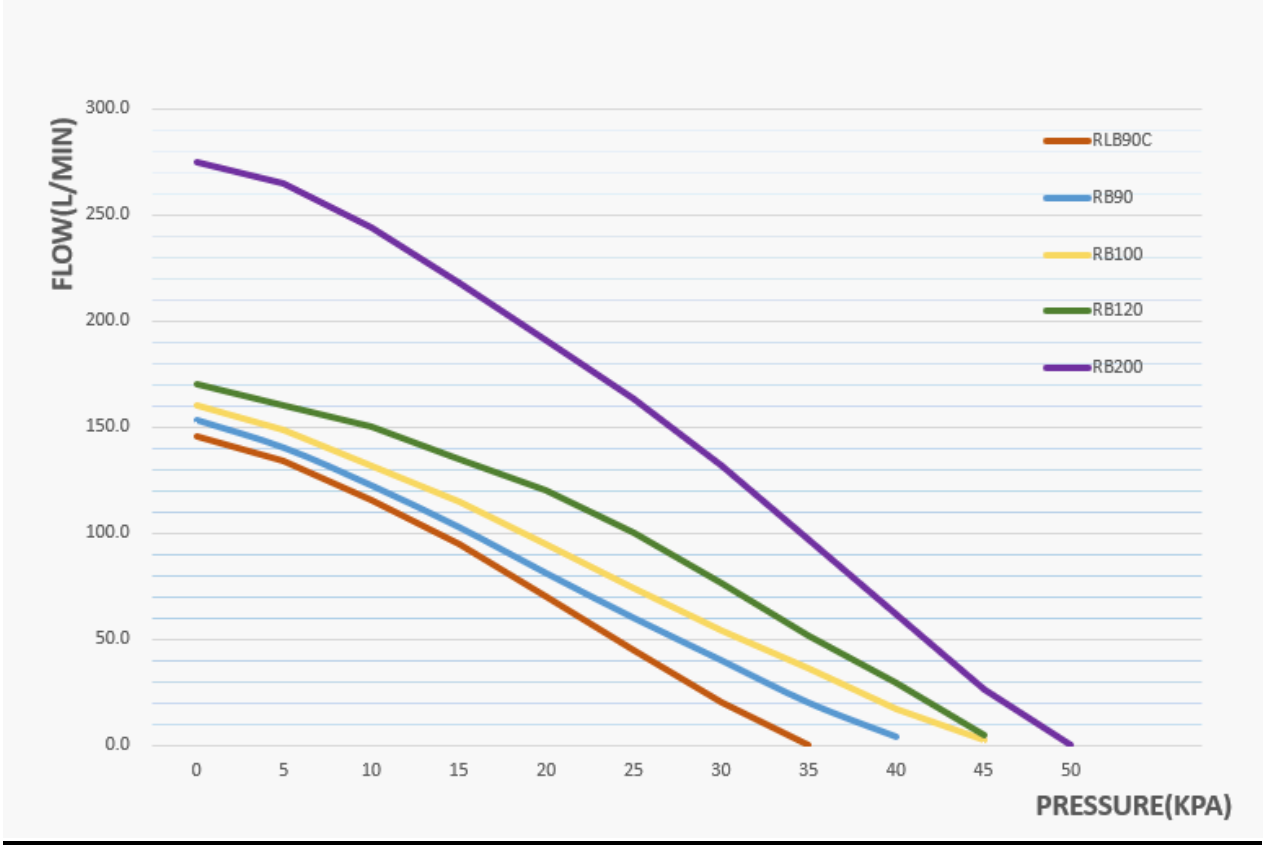

WARRANTY AGAINST DEFECTS

REEFE Air Pumps have a 2 Year Warranty against defects, subject to the terms and conditions.

Please navigate to www.reefe.com.au/warrantyterms to view or download a copy of the warranty terms from our website.

Or you may request a copy by emailing csv@ascento.com.au or by writing to: Ascento Warranty Terms PO Box 650 Morningside QLD 4170 or call us on 07 3893 5000 and request a copy be sent to you.

PRIVACY STATEMENT
We will not use your name, address or phone or fax number, or email address for marketing without your express permission. We will not sell or provide it to any other third party for the purpose of marketing.



WARNING: Conditions of Warranty: This pump MUST NOT be installed in any manner such that if it were to leak, overheat, or any other unforeseen event, that it would cause damage or loss to property or persons. It MUST be installed in a well-ventilated and drained area. DISCONNECT FROM POWER before touching the pump. Keep out of reach of children, pets, wildlife and incompetent persons. DO NOT use for anything other than clean, fresh air. DO NOT use for gases or other chemicals. DO NOT use for breathing apparatus or any such similar application. All warranty is void if these conditions are not heeded and no liability can be accepted in the case of damage or loss caused by failing to comply with these conditions.



WARNING: this pump contains rare earth magnets on the activating arm, be very careful when disassembling these parts — Conditions of Warranty: Do NOT allow the magnets to come into contact with any electronic devices, including watches, cell phones, tablets, computers or any device containing electronic instruments or parts etc. DAMAGE TO ELECTRONIC DEVICES CAN RESULT FROM CLOSE CONTACT WITH THESE MAGNETS and such damage or similar is not covered by the product warranty.

©Copyright Ascento Group Australia. REEFE® is a Registered Trademark of Ascento Group Australia. Specifications are approximate and subject to change without notice at Ascento Group Australia's discretion. Since the methods and conditions of application are beyond our control, Ascento Group Australia does not accept liability for damages or any deficiency in performance resulting from the misuse or abuse of its products. The user must determine whether the chosen product is suitable for its intended purpose. Product may differ to that illustrated due to design improvements. Conditions apply to all Ascento Group Australia product warranties which may be varied at Ascento Group Australia's discretion, the current terms shall apply at the time of any warranty event. E&OE.

ASCENTO GROUP AUSTRALIA ABN: 20527073843
37 EXPORT ST, LYTTON, QLD, 4178 PO BOX 650, MORNINGSIDE, QLD, 4170
PHONE: 07 3893 5000 EMAIL: csv@ascento.com.au